TRIDONIC

Driver LC 18W 24V o4a NF SC EXC2

excite series 24 V – dimmable (IP20)

Product description

_ Dimmable 24 V constant voltage LED driver for flexible constant voltage strips
_ one4all interface enables different dimming options
_ Dimming range 1 to 100 %
_ No additional external dimmer is needed
_ lumDATA (DALI-2 part ext. 251, 252 and 253)
_ Can be either used built-in or independent with clip-on strain-relief (see data sheet chapter: 1. Standards)
_ The strain relief is included in both packaging variants. In the single packaging (SP) each Driver has also an individual packaging
_ Suitable for emergency escape lighting systems acc. to EN 50172
_ Nominal lifetime up to 50,000 h
_ 5 years guarantee (conditions at https://www.tridonic.com/en/int/services/manufacturer-guarantee-conditions)
_ Made in Austria

Typical applications

_ Ambient and decorative illumination. Cove lighting, façade accent lighting

Technical details

_ 24 V, 18 W
_ Small design
_ Push terminals for simple wiring

Interfaces

_ Near field communication (NFC)
_ one4all (DALI-2, DSI, switchDIM, corridorFUNCTION)
_ Terminal blocks: 45° push terminals

System solution

_ Tridonic LLE FLEX 24V SNC4
_ Tridonic LLE FLEX 24V EXC4
_ In connection with ACL FLEX accessories wire to PCB
_ Test the function of third party light sources before use at low dimming levels to ensure the dimming function works perfectly

Website

http://www.tridonic.com/28004429

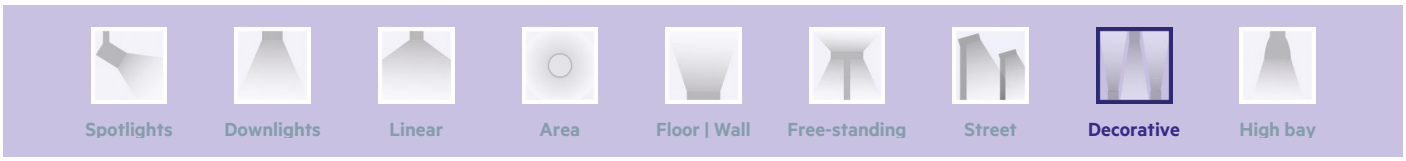

Driver LC 18W 24V o4a NF SC EXC2

excite series 24 V – dimmable (IP20)

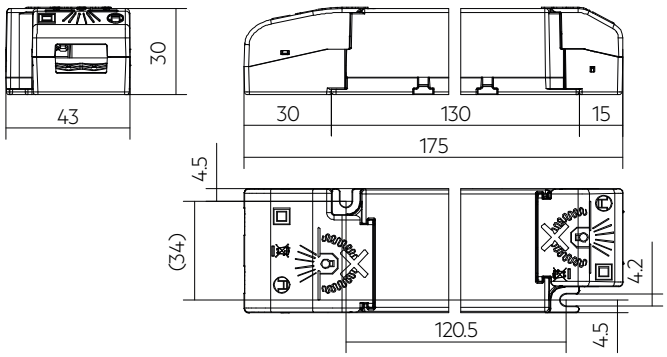

Ordering data

Type	Article number	Packaging, carton	Packaging, pallet	Weight per pc.
Multi packaging				
LC 18W 24V one4all NF SC EXC2	**28004429**	10 pc(s).	390 pc(s).	0.108 kg
Single packaging				
LC 18W 24V one4all NF SC EXC2 SP	**28004434**	10 pc(s).	480 pc(s).	0.108 kg

Technical data

Rated supply voltage	220 – 240 V
AC voltage range	198 – 264 V
DC voltage range	178 – 280 V
Mains frequency	0 / 50 / 60 Hz
Overvoltage protection	320 V AC, 20 h
Typ. rated current (at 230 V, 50 Hz, full load) ①	94 mA
Typ. current (220 V, 0 Hz, full load, EOFx dimlevel)	17 mA
Max. input power	20.7 W
Output power range (P_rated)	1.8 – 18 W
Typ. efficiency (at 230 V, 50 Hz, full load)	86 %
λ over full operating range (max.)	0.97
λ over full operating range (min.)	0.44C
Typ. power consumption on stand-by ②	0.45 W
Typ. input current in no-load operation	11 mA
Typ. input power in no-load operation ②	0.45 W
In-rush current (peak / duration)	12.6 A / 10 µs
THD (at 230 V, 50 Hz, full load) ①	10 %
Output P_ST_LM (at full load)	≤ 1
Output SVM (at full load)	≤ 0.4
Starting time (at 230 V, 50 Hz, full load) ①	≤ 0.6 s
Starting time (DC mode)	≤ 0.3 s
Switchover time (AC/DC) ③	≤ 0.3 s
Turn off time (at 230 V, 50 Hz, full load)	≤ 0.03 s
Output voltage tolerance	± 2 V
Output LF voltage ripple (< 120 Hz)	± 8 %
Max. output voltage (U-OUT)	60 V
PWM frequency	~ 1 kHz
Dimming range	1 – 100 %
Mains surge capability (between L - N)	1 kV
Type of protection	IP20
Lifetime	up to 50,000 h
Guarantee (conditions at www.tridonic.com)	5 Year(s)
Dimensions L x W x H	175 x 43 x 30 mm

Approval marks

lumDATA IP20 SELV RoHS

Standards

EN 55015, EN 61000-3-2, EN 61000-3-3, EN 61347-1, EN 61347-2-13, EN 62384, EN 61547, EN 62386-101, EN 62386-102, EN 62386-207 (DALI-2)

Specific technical data

Type	Load	Output voltage	Output current	Max. output power (at full load)	Typ. power consumption (at full load)	Typ. current consumption	tc point max.	Ambient temperature ta
LC 18W 24V one4all NF SC EXC2	10 %	24 V	75 mA	2 W	2.8 W	23 mA	73 °C	-20 … +60 °C
LC 18W 24V one4all NF SC EXC2	20 %	24 V	150 mA	4 W	4.9 W	31 mA	73 °C	-20 … +60 °C
LC 18W 24V one4all NF SC EXC2	30 %	24 V	225 mA	5 W	7.0 W	38 mA	73 °C	-20 … +60 °C
LC 18W 24V one4all NF SC EXC2	40 %	24 V	300 mA	7 W	9.0 W	46 mA	73 °C	-20 … +60 °C
LC 18W 24V one4all NF SC EXC2	50 %	24 V	375 mA	9 W	11.0 W	54 mA	73 °C	-20 … +60 °C
LC 18W 24V one4all NF SC EXC2	60 %	24 V	450 mA	11 W	13.1 W	62 mA	72 °C	-20 … +55 °C
LC 18W 24V one4all NF SC EXC2	70 %	24 V	525 mA	13 W	15.1 W	70 mA	72 °C	-20 … +55 °C
LC 18W 24V one4all NF SC EXC2	80 %	24 V	600 mA	14 W	17.1 W	78 mA	75 °C	-20 … +50 °C
LC 18W 24V one4all NF SC EXC2	90 %	24 V	675 mA	16 W	19.1 W	87 mA	75 °C	-20 … +50 °C
LC 18W 24V one4all NF SC EXC2	100 %	24 V	750 mA	18 W	21.2 W	95 mA	75 °C	-20 … +50 °C
LC 18W 24V one4all NF SC EXC2 SP	10 %	24 V	75 mA	2 W	2.8 W	23 mA	73 °C	-20 … +60 °C
LC 18W 24V one4all NF SC EXC2 SP	20 %	24 V	150 mA	4 W	4.9 W	31 mA	73 °C	-20 … +60 °C
LC 18W 24V one4all NF SC EXC2 SP	30 %	24 V	225 mA	5 W	7.0 W	38 mA	73 °C	-20 … +60 °C
LC 18W 24V one4all NF SC EXC2 SP	40 %	24 V	300 mA	7 W	9.0 W	46 mA	73 °C	-20 … +60 °C
LC 18W 24V one4all NF SC EXC2 SP	50 %	24 V	375 mA	9 W	11.0 W	54 mA	73 °C	-20 … +60 °C
LC 18W 24V one4all NF SC EXC2 SP	60 %	24 V	450 mA	11 W	13.1 W	62 mA	72 °C	-20 … +55 °C
LC 18W 24V one4all NF SC EXC2 SP	70 %	24 V	525 mA	13 W	15.1 W	70 mA	72 °C	-20 … +55 °C
LC 18W 24V one4all NF SC EXC2 SP	80 %	24 V	600 mA	14 W	17.1 W	78 mA	75 °C	-20 … +50 °C
LC 18W 24V one4all NF SC EXC2 SP	90 %	24 V	675 mA	16 W	19.1 W	87 mA	75 °C	-20 … +50 °C
LC 18W 24V one4all NF SC EXC2 SP	100 %	24 V	750 mA	18 W	21.2 W	95 mA	75 °C	-20 … +50 °C

① Valid at 100 % dimming level.
② Depending on the DALI traffic at the interface.
③ Valid for immediate change of power supply type otherwise the starting time is valid.

1. Standards

EN 55015
EN 61000-3-2
EN 61000-3-3
EN 61347-1
EN 61347-2-13
EN 62384
EN 61547
EN 62386-101 (DALI-2)
EN 62386-102 (DALI-2)
EN 62386-207 (DALI-2, including part 105, 251, 252, 253)
According to EN 62386-101/102/103
According to EN 50172 for use in central battery systems
According to EN 60598-2-22 suitable for emergency lighting installations

2. Thermal details and lifetime

2.1 Expected lifetime

Expected lifetime

Type	Output load	ta	40 °C	45 °C	50 °C	55 °C	60 °C
LC 18W 24V one4all NF SC EXC2	10 W	tc	–	–	65 °C	69 °C	73 °C
		Lifetime	–	–	>100,000 h	79,000 h	54,000 h
	> 10 – 13 W	tc	–	63 °C	68 °C	72 °C	–
		Lifetime	–	>100,000 h	85,000 h	60,000 h	–
	> 13 – 18 W	tc	67 °C	71 °C	75 °C	–	–
		Lifetime	>100,000 h	90,000 h	65,000 h	–	–

The LED control gear is designed for a lifetime stated above under reference conditions and with a failure probability of less than 10 %.

The relation of tc to ta temperature depends also on the luminaire design.
If the measured tc temperature is approx. 5 K below tc max., ta temperature should be checked and eventually critical components (e.g. ELCAP) measured. Detailed information on request.

3. Installation / wiring

3.1 Circuit diagram

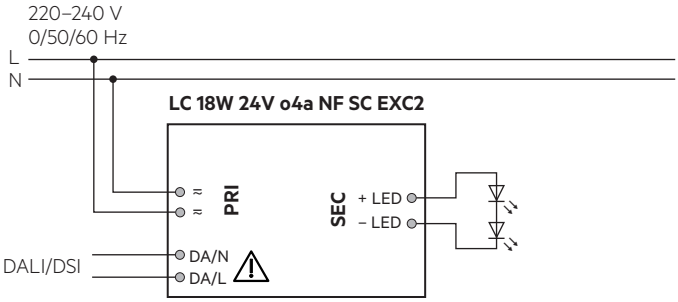

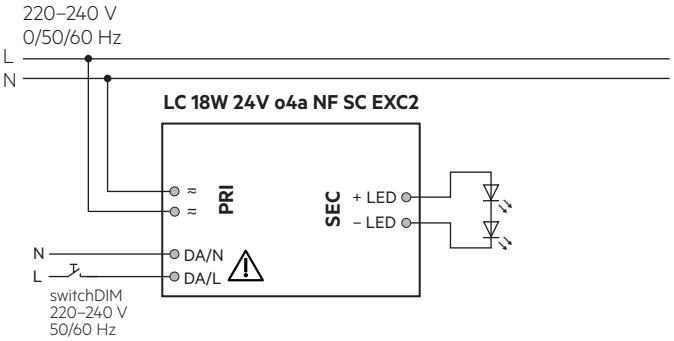

Recommendation to check glowing at standby in combination with class I luminaires.

3.2 Wiring type and cross section

For wiring use stranded wire with ferrules or solid wire from 0.2 – 1.5 mm².
For perfect function of the push-wire terminals (WAGO 250) the strip length should be 8.5 – 9.5 mm.
Use one wire for each terminal connector only.

LED module/LED driver/supply

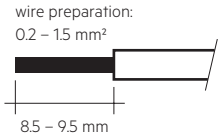

3.3 Loose wiring

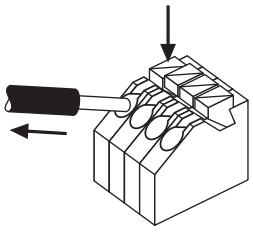

Release of the wiring
Press down the “push button” and remove the cable from front.

3.4 Wiring guidelines

- Run the secondary lines separately from the mains connections and lines to achieve good EMC performance.
- The max. secondary cable (LED module) length is 2 m (4 m circuit).
- For good EMC performance, keep the LED wiring as short as possible.
- To comply with the EMC regulations run the secondary wires (LED module) in parallel.
- Secondary switching is not permitted.
- The LED driver has no inverse-polarity protection on the secondary side. Wrong polarity can damage LED modules with no inverse-polarity protection.
- Wrong wiring of the LED driver can lead to malfunction or irreparable damage.
- To avoid damage of the Driver, the wiring must be protected against short circuits to earth (sharp edged metal parts, metal cable clips, louver, etc.).

3.5 Hot plug-in

Hot plug-in is not supported due to residual output voltage of > 0 V.
When connecting an LED load, restart the device to activate the LED output.
This can be done via mains reset or via interface (DSI, switchDIM).

3.6 Control terminals

⚠ There is a risk of electric shock when touching these terminals in case of failure.

3.7 Fixing conditions when using as independent Driver with Clip-On

Dry, acidfree, oilfree, fatfree. It is not allowed to exceed the maximum ambient temperature (ta) stated on the device. Minimum distances stated below are recommendations and depend on the actual luminaire.
Is not suitable for fixing in corner.

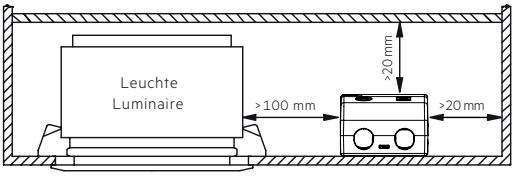

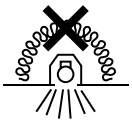

Device not suitable for covering with thermally insulating material according to IEC 60598-1 Ed.9

4. Electrical values

4.1 Efficiency vs. load

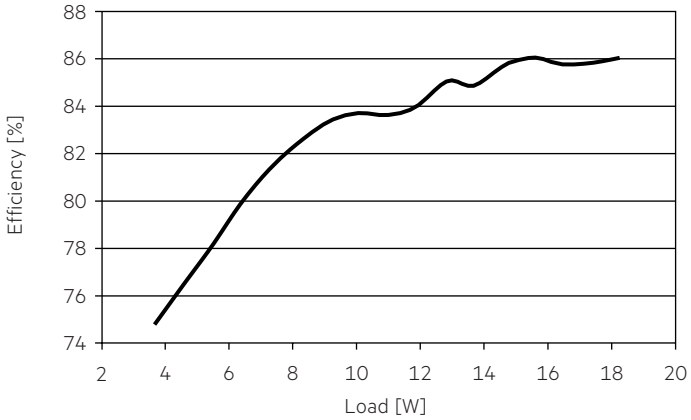

4.2 Power factor vs. Load

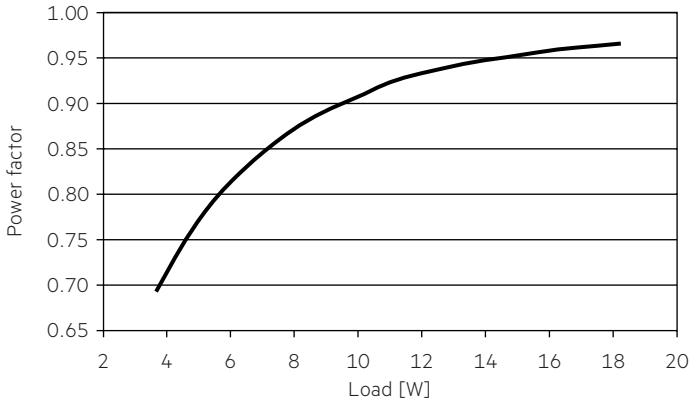

4.3 THD vs. Load

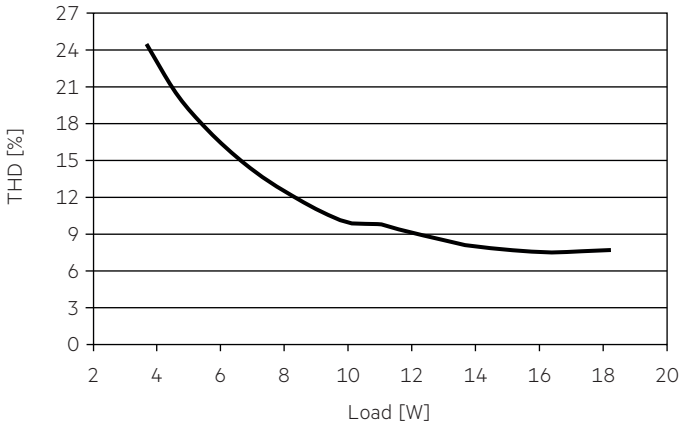

4.4 Maximum loading of automatic circuit breakers in relation to inrush current

Automatic circuit breaker type	C10	C13	C16	C20	B10	B13	B16	B20	Inrush current	
Installation Ø	1.5 mm²	1.5 mm²	2.5 mm²	2.5 mm²	1.5 mm²	1.5 mm²	2.5 mm²	2.5 mm²	I_{max}	time
LC 18W 24V one4all NF SC EXC2	150	180	200	220	150	180	200	220	12.6 A	10 µs

These are max. values calculated out of inrush current! Please consider not to exceed the maximum rated continuous current of the circuit breaker.
Calculation uses typical values from ABB series S200 as a reference.
Actual values may differ due to used circuit breaker types and installation environment.

4.5 Harmonic distortion in the mains supply (at 230 V / 50 Hz and full load) in %

	THD	3.	5.	7.	9.	11.
LC 18W 24V one4all NF SC EXC2	8	6	2	2	2	2

4.6 Dimming

Dimming range 1 % to 100 %
Digital control with:
- DSI signal:
  8 bit Manchester Code Speed 1 % to 100 % in 1.4 s
- DALI signal:
  16 bit Manchester Code Speed 1 % to 100 % in 0.2 s
  Programmable parameter:
  Minimum dimming level Maximum dimming level Default minimum = 1 %

Dimming curve is adapted to the eye sensitiveness.
Dimming is realized by amplitude dimming.

4.7 Dimming characteristics

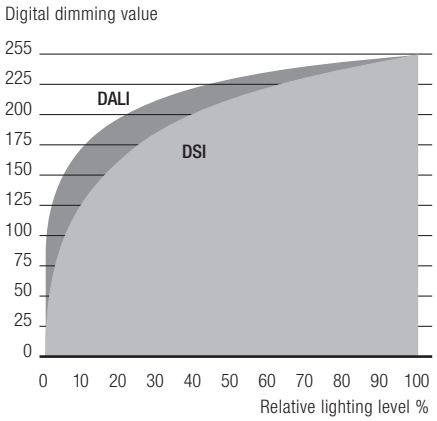

Dimming characteristics as seen by the human eye

5. Software / Programming / Interfaces

5.1 Software / programming

With appropriate software and interface different functions can be activated and various parameters can be configured in the LED driver. The Driver supports the following software and interfaces:

Software for configuration:
- companionSUITE (deviceGENERATOR, deviceCONFIGURATOR, deviceANALYSER, 4service NFC app)
- masterCONFIGURATOR

Interfaces for data transfer:
- NFC
- Control input DALI

5.2 Nearfield communication (NFC)

The NFC Interface allows wireless communication with the LED driver. This interface offers the option to write configuration and to read configuration, errors and events with the companionSUITE.
A correct communication between the LED driver and the NFC antenna can only be guaranteed if the antenna is placed directly on the Driver.
Any material placed between the LED driver and the NFC antenna can cause a deterioration of the communication quality.
After programming the device via NFC power up the device one time for one second till the deviceANALYSER can read out the parameters.
We recommend the use of following NFC antenna:
www.tridonic.com/nfc-readers

With a suitable NFC antenna several devices can be programmed at the same time (NFC multiprogramming).

NFC is complied with ISO/IEC 15963 standard.

Changing parameters via NFC shall be done by qualified engineers only.

5.3 Control input DALI

The control input is non-polar for digital control signals (DALI).
The control signal is not SELV. The control cable has to be installed in accordance to the requirements of low voltage installations.

Digital control with:
- DALI signal: 16 bit
- DSI signal: 8 bit

6. Functions

⊙ companionSUITE:
DALI-USB, NFC
The companionSUITE with deviceGENERATOR, deviceCONFIGURATOR and deviceANALYSER is available via our WEB page:
https://www.tridonic.com/com/en/products/companionsuite.asp

◈ masterCONFIGURATOR:
DALI-USB
The masterCONFIGURATOR is available via our WEB page:
https://www.tridonic.com/com/en/software-masterconfigurator.asp

Icon	Function	NFC	DALI-2	
	OEM Identification	⊙	⊙	–
	OEM GTIN	⊙	⊙	–
	Luminaire data	⊙	⊙	–
	Device operating mode	⊙	⊙	◈
	switchDIM	⊙	⊙	◈
	corridorFUNCTION	⊙	⊙	◈
	Constant light output (eCLO)	⊙	⊙	◈
	DC level	⊙	⊙	◈
	Enhanced power on level (ePOL)	⊙	⊙	◈
	DALI default parameters	⊙	⊙	◈
	Scenes and groups	⊙	⊙	◈
	fade2zero	⊙	⊙	◈
	Power-up fading	⊙	⊙	◈
	deviceKEY	⊙	⊙	–
	Intelligent voltage guard (IVG)	⊙	⊙	◈
	Dimming curve	⊙	⊙	◈
	Factory reset	⊙	⊙	–

6.1 OEM Identification

The OEM (Original Equipment Manufacturer) can set his own identification number.
DALI Part 251: Memory bank 1 extension.

6.2 OEM GTIN

The Original Equipment Manufacturer (OEM) can set his own Global Trade Item Number (GTIN).
DALI Part 251: Memory bank 1 extension.

6.3 Luminaire data

This function provides the asset management with accurate data about the luminaire.
DALI Part 251: Memory bank 1 extension.
DALI Part 253: Luminaire maintenance data.

6.4 Device operating mode

A Tridonic Driver supports several control signals.
These control signals are automatically detected and the mode is adapted.
If only one special device mode is required, this mode can be selected.
“Automatic detection” is the default setting.

6.5 switchDIM

Integrated switchDIM function allows a direct connection of a pushbutton for dimming and switching.
Brief push (< 0.6 s) switches LED driver ON and OFF. The dimm level is saved at power-down and restored at power-up. When the pushbutton is held, LED modules are dimmed. After repush the LED modules are dimmed in the opposite direction.
In installations with LED drivers with different dimming levels or opposite dimming directions (e.g. after a system extension), all LED drivers can be synchronized to 50 % dimming level by a 10 s push.
Use of pushbutton with indicator lamp is not permitted.

6.6 corridorFUNCTION

With the corridorFUNCTION and a commercially available motion detector, it is easy to adapt the lighting in one area to its use.
That is, when the area is entered by a person, the lighting dims instantly to the desired brightness and is available in full strength.
After the area is left by the person, the brightness dims slowly to a smaller value or switches off completely.
The individual parameters of the desired profile, such as brightness values or delay times, can be adjusted flexibly and individually.

6.7 Enhanced Constant Light Output (eCLO)

With this function the light output of the LED module can be kept equal over the lifetime.
The light output of an LED module reduces over the course of its lifetime.
The Constant Light Output (eCLO) function compensates for this natural decline by constantly increasing the output current of the LED driver throughout its lifetime.
Enhanced eCLO shall be achieved by limitation of the LED current at the commissioning of the LED driver and providing a linear interpolation of the current over the time, depending on the data points given by the user.
The user has to insert up to eight pairs of data (time, level).
The output curve is the result of connecting the user data points linear.
Detailed description for eCLO see product manual.

The minimal CLO starting point is limited by the smallest output current of the LED driver.

6.8 DC operation

In emergency light systems with a central battery supply the DC recognition function uses the input voltage to detect if emergency mode is present.
The LED driver then automatically switches to DC mode and dims the light to the defined DC level.
Without DC recognition different and more complex solutions would have to be applied in order to detect emergency mode.
DC recognition is integrated in the device as standard.
No additional commissioning is necessary for activation.

This is a safety-relevant parameter.
The setting is relevant for the dimensioning of the central battery system.

The LED driver is designed to operate on DC voltage and pulsed DC voltage. For a reliable operation, make sure that also in DC emergency operation the LED driver is run within the specified conditions as stated in chapter "4.1 operating window".

Light output level in DC operation: programmable 1 – 100 %
(factory default = 15 %, EOF_i = 0.13).

The voltage-dependent input current of Driver incl. LED module is depending on the used load.

The voltage-dependent no-load current of Driver (without or defect LED module) is for:
AC: < 12.5 mA
DC: < 2.9 mA

In DC operation dimming mode can be activated.
If Dimming on DC is activated the requirements of the DC recognition function are ignored.
Even if DC is detected, the LED driver continues to behave as in AC mode

- The present dimming level is retained
- An emergency light level defined for the DC recognition function (DC level) is ignored
- Control signals via DALI continue to be executed

If Dimming on DC is activated then emergency mode is not recognised.
The device no longer automatically switches to the emergency light level.

6.9 Enhanced power on level (ePOL)

The Enhanced Power On Level parameter defines the power level that is set automatically when power is restored after a power failure.
The Enhanced Power On Level can be set to a fixed value (0 – 100 %) or can recall the memory value.
The memory value is the last value the LED driver was set to before the power failure.
This value applies not only in DALI device operating mode, but also in the device operating mode switchDIM and DSI.

6.10 DALI default parameters

In order for all luminaires to react the same for each operation (switching, dimming, scene recall ...), these values must be set the same.
These DALI standard parameters are supported by every DALI-2 device.

6.11 Scenes and groups

Each device can be a member of up to 16 groups.
Also, 16 different scene values can be stored in each device.

6.12 fade2zero

When the Driver is switched off, fade2zero allows a smooth dimming down to almost zero.
Activate the fade2zero function when programming with companionSUITE and set a DALI fade time.
The device then dims to far below the limit of its working window (dimming range).
This function is deactivated by default.

6.13 Power-up fading

The power-up function offers the opportunity to modify the on behavior.
The time for fading on can be adjusted in a range of 0.2 to 16 seconds.
According to this value, the device dims from 0 % up to the power-on level.
By factory default no fading time is set (= 0 seconds).

6.14 deviceKEY

This function enables a password protection for device settings to prevent unauthorized access or changes.

6.15 Dimming curve

DALI:
The desired dimming behaviour is selected via two different dimming curves (logarithmic or linear).
The default setting of the dimming behaviour is logarithmic.

7. Protective features

7.1 Intelligent temperature guard (ITG)

The Intelligent temperature guard (ITG) function provides effective protection against thermal overloads by slowly reducing the output if a defined internal temperature is exceeded.
The reduction of overtemperatures takes place in small steps every two minutes. As soon as the temperature drops again, the output power is gradually increased every 10 minutes.
On DC operation this function is deactivated to fulfill emergency requirements.

7.2 Intelligent Voltage Guard (IVG)

Intelligent Voltage Guard is the name of the electronic monitoring of the mains voltage. It immediately shows if the mains voltage rises above certain thresholds. Measures can then be taken quickly to prevent damage to the LED driver.

- If the mains voltage rises above approx. 280 Vrms (voltage depends on the LED driver type), the LED light starts flashing on and off.
- To avoid a damage of the LED driver the mains supply has to be switched off at this signal.

7.3 Short-circuit behaviour

In case of a short-circuit at the LED output the LED output is switched off.
After restart of the LED driver the output will be activated again. The restart can either be done via mains reset or via interface (DALI, DSI, switchDIM).

7.4 No-load operation

The LED driver will not be damaged in no-load operation. The output will be deactivated and is therefore free of voltage. If a LED load is connected the device has to be restarted before the output will be activated again.
The restart can either be done via mains reset or via interface (DALI, DSI, switchDIM).

7.5 Overload protection

If the maximum load is exceeded by a defined internal limit, the LED driver turns off the LED output. After restart of the LED driver the output will be activated again.
The restart can either be done via mains reset or via interface (DALI, DSI, switchDIM).

7.6 Insulation between terminals

Insulation	Mains	LED	o4a
Mains	–	double	basic
LED	double	–	double
o4a	basic	double	–

basic ... represents basic insulation.
double ... represents double or reinforced insulation.

8. Miscellaneous

8.1 Insulation and electric strength testing of luminaires

Electronic devices can be damaged by high voltage. This has to be considered during the routine testing of the luminaires in production.

According to EN 60598-1 Annex Q (informative only!) or ENEC 303-Annex A, each luminaire should be submitted to an insulation test with 500 V DC for 1 second. This test voltage should be connected between the interconnected phase and neutral terminals and the earth terminal.
The insulation resistance must be at least 2 MΩ.

As an alternative, EN 60598-1 Annex Q describes a test of the electrical strength with 1500 V AC (or 1.414 x 1500 V DC). To avoid damage to the electronic devices this test must not be conducted.

8.2 Conditions of use and storage

Humidity:	5 % up to max. 85 %, not condensed (max. 56 days/year at 85 %)
Storage temperature:	-40 °C up to max. +85 °C

The devices have to be acclimatised to the specified temperature range (ta) before they can be operated.

The LED driver is declared as inbuilt LED controlgear, meaning it is intended to be used within a luminaire enclosure.
If the product is used outside a luminaire, the installation must provide suitable protection for people and environment (e.g. in illuminated ceilings).

8.3 Maximum number of switching cycles

All LED driver are tested with 50,000 switching cycles.
The actually achieved number of switching cycles is significantly higher.

8.4 Additional information

Additional technical information at www.tridonic.com → Technical Data

Lifetime declarations are informative and represent no warranty claim.
No warranty if device was opened.