Driver LC 60W 24V bDW SC PRE2

LED driver premium constant voltage

Product description

_ Can be integrated in Casambi systems (Casambi Ready)
_ NEW: lumDATA (Luminaire data, Energy reporting and Diagnostics & Maintenance)
_ Dimmable 24 V constant voltage LED driver for flexible constant voltage strips
_ Can be either used built-in or independent with clip-on strain-relief (see data sheet chapter: 1. Standards)
_ The strain relief is included in both packaging variants. In the single packaging (SP) each Driver has also an individual packaging
_ basicDIM Wireless enables different dimming options
_ Forms automatically a wireless communication network with up to 250 nodes
_ Dimming range 1 to 100 %
_ No additional external dimmer is needed
_ Suitable for emergency escape lighting systems acc. to EN 50172
_ Nominal lifetime up to 50,000 h
_ 5 years guarantee (conditions at https://www.tridonic.com/en/int/services/manufacturer-guarantee-conditions)
_ We will provide security updates for the next five years after the date of purchase of this product

Typical applications

_ Cove lighting, facade accent lighting, ceiling integration

Technical details

_ 24 V, 60 W
_ Small design (225 x 43 x 30.2 mm) with stretched-compact strain relief
_ Small cross section
_ Push terminals for simple wiring
_ Output terminals (+/–) equipped twice for more flexibility in the application

Interfaces

_ basicDIM Wireless
_ Terminal blocks: 45° push terminals

System solution

_ Tridonic LLE-FLEX ADV 600, 1,200, 1,800 lm/m
_ Tridonic LLE-FLEX EXC 600, 1,200, 1,800, 2,500 lm/m
_ In connection with Flex accessories wire to PCB plug
_ Test the function of third party light sources before use at low dimming levels to ensure the dimming function works perfectly

Website

http://www.tridonic.com/28002416

Spotlights

Downlights

Linear

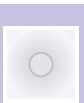
Area

Floor | Wall

Free-standing

Street

Decorative

High bay

Driver LC 60W 24V bDW SC PRE2

LED driver premium constant voltage

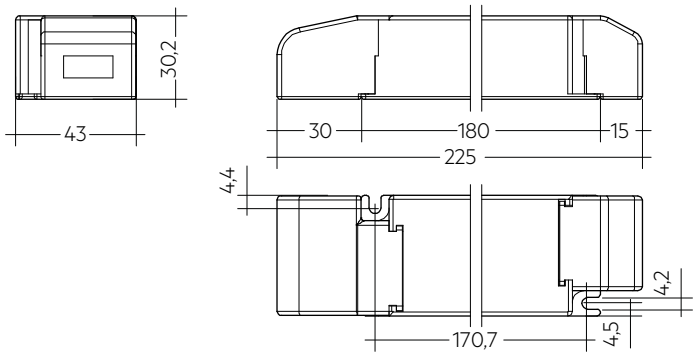

With strain-relief

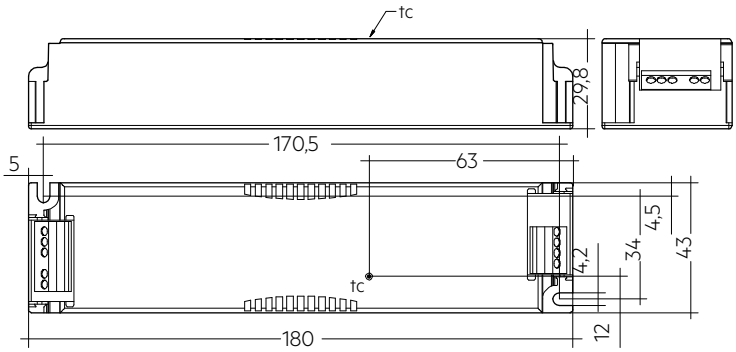

Without strain-relief

Ordering data

Type	Article number	Packaging, carton	Packaging, pallet	Weight per pc.
Multi packaging				
LC 60/24V bDW SC PRE2	**28002416**	10 pc(s).	390 pc(s).	0.176 kg
Single packaging				
LC 60/24V bDW SC PRE2 SP	**28002674**	10 pc(s).	480 pc(s).	0.176 kg

Technical data

Rated supply voltage	220 – 240 V
AC voltage range	198 – 264 V
DC voltage range	176 – 280 V
Mains frequency	0 / 50 / 60 Hz
Overvoltage protection	320 V AC, 48 h
Typ. rated current (at 230 V, 50 Hz, full load) ①	295 mA
Typ. current (220 V, 0 Hz, full load, 15 % dimming level)	59 mA
Leakage current (at 230 V, 50 Hz, full load) ①	< 320 µA
Max. input power	67 W
Typ. efficiency (at 230 V, 50 Hz, full load)	93 %
λ (at 230 V, 50 Hz, full load) ①	0.98
Typ. power consumption on stand-by	< 0.35 W
Typ. input current in no-load operation	35.8 mA
Typ. input power in no-load operation	2.05 W
In-rush current (peak / duration)	32.2 A / 187 µs
THD (at 230 V, 50 Hz, full load) ①	< 5.3 %
Starting time (at 230 V, 50 Hz, full load) ①	< 0.6 s
Starting time (DC mode)	< 0.3 s
Switchover time (AC/DC) ②	< 0.3 s
Turn off time (at 230 V, 50 Hz, full load)	< 3 ms
Output voltage tolerance	± 1 V
Output LF voltage ripple (< 120 Hz)	± 5 %
Max. output voltage (U-OUT)	60 V
PWM frequency	~ 1 kHz
Dimming range	1 – 100 %
Mains surge capability (between L - N)	1 kV
Mains surge capability (between L/N - PE)	2 kV
Type of protection	IP20
Radio transceiver operating frequencies	2.4 – 2.483 GHz
Max. output power radio transceiver (E.I. R.P.) ③	< + 20 dBm
Radio protocol	Bluetooth 4.0 or 5.0 Low Energy (BLE)
Capable for mesh network	Up to 250 nodes / Standard networks and Long Range
Lifetime	up to 50,000 h
Guarantee (conditions at www.tridonic.com)	5 Year(s)
Dimensions L x W x H	225 x 43 x 30.2 mm

Approval marks

lumDATA IP20 SELV RoHS

Standards

EN 55015, EN 61000-3-2, EN 61000-3-3, EN 61347-1, EN 61347-2-13, EN 62384, EN 61547, ETSI EN 300 330, ETSI EN 301 489-1, ETSI EN 301 489-3, ETSI EN 300 328, ETSI EN 301 489-17, according to EN 50172, according to EN 60598-2-22

Specific technical data

Type	Load	Output voltage	Output current	Max. output power (at full load)	Typ. power consumption (at full load)	Typ. current consumption	tc point max.	Ambient temperature ta
LC 60/24V bDW SC PRE2	10 %	24 V	250 mA	6 W	8.9 W	61 mA	75 °C	-25 … +60 °C
LC 60/24V bDW SC PRE2	20 %	24 V	500 mA	12 W	15.3 W	88 mA	75 °C	-25 … +60 °C
LC 60/24V bDW SC PRE2	30 %	24 V	750 mA	18 W	21.4 W	106 mA	75 °C	-25 … +60 °C
LC 60/24V bDW SC PRE2	40 %	24 V	1,000 mA	24 W	27.8 W	132 mA	75 °C	-25 … +55 °C
LC 60/24V bDW SC PRE2	50 %	24 V	1,250 mA	30 W	34.1 W	157 mA	75 °C	-25 … +55 °C
LC 60/24V bDW SC PRE2	60 %	24 V	1,500 mA	36 W	40.6 W	184 mA	75 °C	-25 … +55 °C
LC 60/24V bDW SC PRE2	70 %	24 V	1,750 mA	42 W	47.0 W	212 mA	75 °C	-25 … +50 °C
LC 60/24V bDW SC PRE2	80 %	24 V	2,000 mA	48 W	53.5 W	239 mA	75 °C	-25 … +50 °C
LC 60/24V bDW SC PRE2	90 %	24 V	2,250 mA	54 W	60.0 W	267 mA	75 °C	-25 … +50 °C
LC 60/24V bDW SC PRE2	100 %	24 V	2,500 mA	60 W	66.4 W	295 mA	75 °C	-25 … +50 °C
LC 60/24V bDW SC PRE2 SP	10 %	24 V	250 mA	6 W	8.9 W	61 mA	75 °C	-25 … +60 °C
LC 60/24V bDW SC PRE2 SP	20 %	24 V	500 mA	12 W	15.3 W	88 mA	75 °C	-25 … +60 °C
LC 60/24V bDW SC PRE2 SP	30 %	24 V	750 mA	18 W	21.4 W	106 mA	75 °C	-25 … +60 °C
LC 60/24V bDW SC PRE2 SP	40 %	24 V	1,000 mA	24 W	27.8 W	132 mA	75 °C	-25 … +55 °C
LC 60/24V bDW SC PRE2 SP	50 %	24 V	1,250 mA	30 W	34.1 W	157 mA	75 °C	-25 … +55 °C
LC 60/24V bDW SC PRE2 SP	60 %	24 V	1,500 mA	36 W	40.6 W	184 mA	75 °C	-25 … +55 °C
LC 60/24V bDW SC PRE2 SP	70 %	24 V	1,750 mA	42 W	47.0 W	212 mA	75 °C	-25 … +50 °C
LC 60/24V bDW SC PRE2 SP	80 %	24 V	2,000 mA	48 W	53.5 W	239 mA	75 °C	-25 … +50 °C
LC 60/24V bDW SC PRE2 SP	90 %	24 V	2,250 mA	54 W	60.0 W	267 mA	75 °C	-25 … +50 °C
LC 60/24V bDW SC PRE2 SP	100 %	24 V	2,500 mA	60 W	66.4 W	295 mA	75 °C	-25 … +50 °C

① Valid at 100 % dimming level.
② Valid for immediate change of power supply type otherwise the starting time is valid.
③ E.I.R.P.: Equivalent Isotropically Radiated Power.

1. Standards

EN 55015
EN 61000-3-2
EN 61000-3-3
EN 61347-1
EN 61347-2-13
EN 62384
EN 61547
ETSI EN 300 330
ETSI EN 301 489-1
ETSI EN 301 489-3
ETSI EN 300 328
ETSI EN 301 489-17
According to EN 50172 for use in central battery systems
According to EN 60598-2-22 suitable for emergency lighting installations

Housing fulfills requirements for reinforced insulation according EN 60598-1.

1.1 Glow wire test

according to EN 61347-1 with increased temperature of 850 °C passed.

2. Thermal details and lifetime

2.1 Expected lifetime

Expected lifetime

Type	Output load	ta	30 °C	40 °C	50 °C	55 °C	60 °C
LC 60/24V bDW SC PRE2	60 – 41 W	tc	55 °C	65 °C	75 °C	–	–
		Lifetime	> 100,000 h	> 100,000 h	55,000 h	–	–
	40 – 21 W	tc	–	60 °C	70 °C	73 °C	–
		Lifetime	–	> 100,000 h	85,000 h	65,000 h	–
	≤ 20 W	tc	–	55 °C	65 °C	70 °C	75 °C
		Lifetime	–	> 100,000 h	> 100,000 h	80,000 h	60,000 h

The LED control gear is designed for a lifetime stated above under reference conditions and with a failure probability of less than 10 %.

The relation of tc to ta temperature depends also on the luminaire design.
If the measured tc temperature is approx. 5 K below tc max., ta temperature should be checked and eventually critical components (e.g. ELCAP) measured. Detailed information on request.

3. Installation / wiring

3.1 Circuit diagram

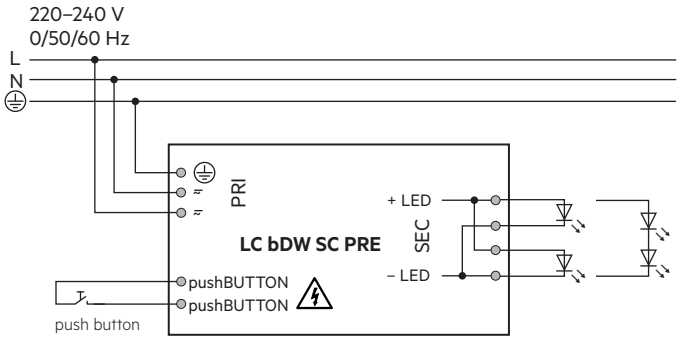

Recommendation to check glowing at standby in combination with class I luminaires.

The used push button has to be insulated.
Connecting 230 V on the pushBUTTON terminal will damage the driver.

3.2 Wiring type and cross section

Mains supply wires
For wiring use stranded wire with ferrules or solid wire from 0.2 – 1.5 mm².
For perfect function of the push-wire terminals (WAGO 250) the strip length should be 8.5 – 9.5 mm.
Use one wire for each terminal connector only.

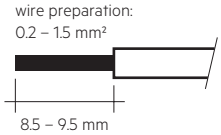

Secondary wires (LED module)
For wiring use stranded wire with ferrules or solid wire from 0.2 – 1.5 mm² (24AWG – 16AWG).
For perfect function of the push-wire terminals (Phoenix SPTAF 1/4-5,0-IL) the strip length should be 8 mm.
Use one wire for each terminal connector only.

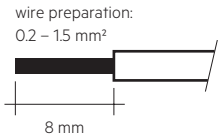

Secondary strain relief for cables with bigger cable sheath

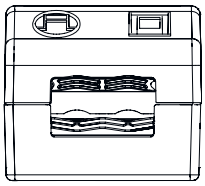

Secondary strain relief for cable with smaller cable sheath

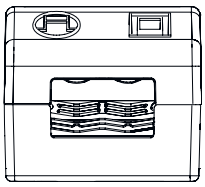

3.3 Loose wiring

Mains supply wires

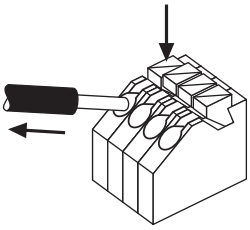

Release of the wiring
Press down the "push button" and remove the cable from front.

Secondary wires (LED module)

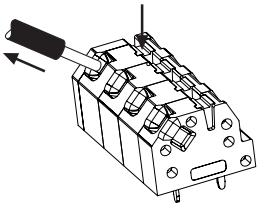

3.4 Fixing conditions when using as independent Driver with Clip-On

Dry, acidfree, oilfree, fatfree. It is not allowed to exceed the maximum ambient temperature (ta) stated on the device. Minimum distances stated below are recommendations and depend on the actual luminaire.
Device is not suitable for fixing in corner.

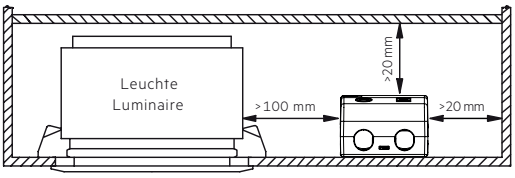

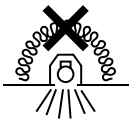

Device not suitable for covering with thermally insulating material according to IEC 60598-1 Ed.9

3.5 Wiring guidelines

- Run the secondary lines separately from the mains connections and lines to achieve good EMC performance.
- The max. secondary cable (LED module) length is 2 m (4 m circuit).
- For good EMC performance, keep the LED wiring as short as possible.
- To comply with the EMC regulations run the secondary wires (LED module) in parallel.
- Secondary switching is not permitted.
- The LED driver has no inverse-polarity protection on the secondary side. Wrong polarity can damage LED modules with no inverse-polarity protection.
- Wrong wiring of the LED driver can lead to malfunction or irreparable damage.
- To avoid damage of the Driver, the wiring must be protected against short circuits to earth (sharp edged metal parts, metal cable clips, louver, etc.).

3.6 Hot plug-in

Hot plug-in is not supported due to residual output voltage of > 0 V.
When connecting an LED load, restart the device to activate the LED output.
This can be done via mains reset or interface (basicDIM Wireless).

3.7 Earth connection

The earth connection is conducted as protection earth (PE). The LED driver can be earthed via earth terminal. If the LED driver will be earthed, protection earth (PE) has to be used. There is no earth connection required for the functionality of the LED driver. Earth connection is recommended to improve following
behaviour:

- Electromagnetic interferences (EMI)
- LED glowing at standby
- Transmission of mains transients to the LED output

In general it is recommended to earth the LED driver if the LED module is mounted on earthed luminaire parts respectively heat sinks and thereby representing a high capacity against earth.

3.8 FELV control terminals

WARNING: FELV terminals marked "Risk of electric shock" are not safe to touch. Circuits connected to any FELV control terminal shall be insulated from the LV supply voltage of the control gear.
Any terminals connected to the FELV circuit shall be protected against accidental contact.

3.9 Independent control gear classification

"Do not cover", "non-IC" and "IC" classified control gear are recommended to be installed according to the Fixing conditions in 3.4.

4. Electrical values

4.1 Efficiency vs. load

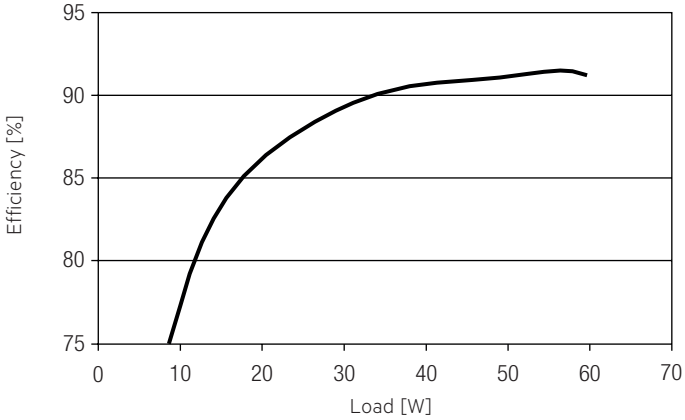

4.2 Power factor vs. Load

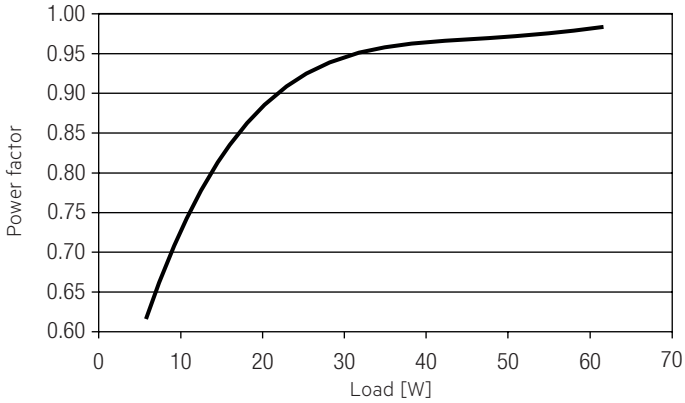

4.3 Input power vs. Load

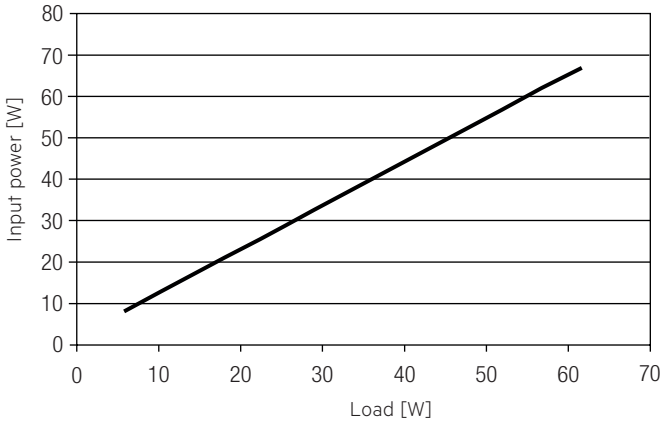

4.4 Input current vs. Load

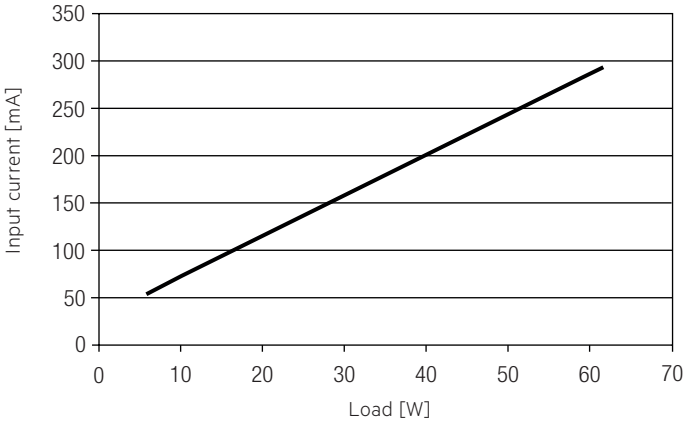

4.5 THD vs. Load

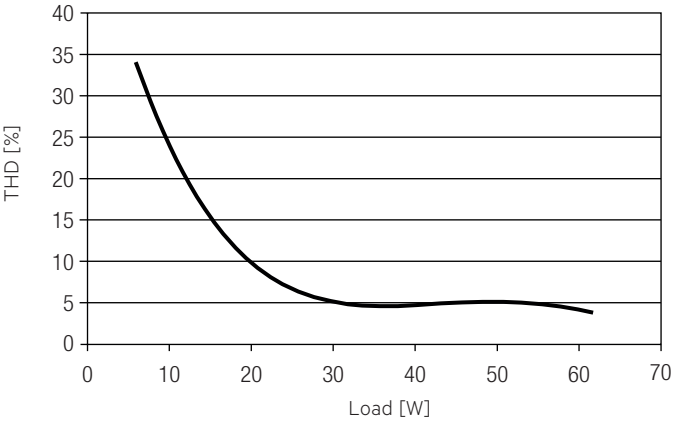

4.6 Maximum loading of automatic circuit breakers in relation to inrush current

Automatic circuit breaker type	C10	C13	C16	C20	B10	B13	B16	B20	Inrush current	
Installation Ø	1.5 mm²	1.5 mm²	2.5 mm²	4 mm²	1.5 mm²	1.5 mm²	2.5 mm²	4 mm²	I_{max}	time
LC 60/24V bDW SC PRE2	13	18	23	30	8	11	14	18	32.2 A	187 µs

These are max. values calculated out of inrush current! Please consider not to exceed the maximum rated continuous current of the circuit breaker.
Calculation uses typical values from ABB series S200 as a reference.
Actual values may differ due to used circuit breaker types and installation environment.

4.7 Harmonic distortion in the mains supply (at 230 V / 50 Hz and full load) in %

	THD	3.	5.	7.	9.	11.
LC 60/24V bDW SC PRE2	4	4	1	2	1	1

4.8 Dimming

Dimming range 1 % to 100 %
Digital control with:
- basicDIM Wireless

4.9 Dimming characteristics

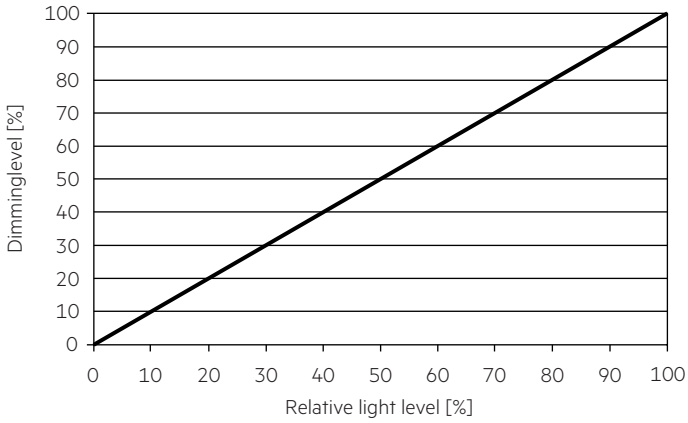

5. Interfaces / communication

5.1 Control input

A standard push button can be connected on the input terminals.
Maximum cable lenght of the push button is 1 meter.
This function have to be activated before using.

The control signal is not SELV. Control cable has to be installed in accordance to the requirements of low voltage installations.
Different functions depending on each module.
Profile change see handbook https://www.tridonic.com/com/en/download/technical/Documentation_Tridonic_4remote_BT_EN.pdf

5.2 Commissioning

When a Matter device is not yet commissioned, it will send out BLE advertisements for 15 min. It's only possible to pair the device in this period of time, afterwards a power cycle is necessary.

Also of importance:
- Network is up and running
- Thread border router compatible with the Matter ecosystem is available and in the network
- Minimum requirements:
  Android / Google: Android O (8.1, API level 27) or newer
  iOS / Apple: iOS version 16.x
- Matter ready devices

6. Functions

6.1 Short-circuit behaviour

In case of a short-circuit at the LED output the LED output is switched off. After restart of the LED driver the output will be activated again.
The restart can either be done via mains reset or via software or pushBUTTON.

6.2 Overload protection

If the maximum load is exceeded by a defined internal limit, the LED driver turns off the LED output. After restart of the LED driver the output will be activated again.
The restart can either be done via mains reset or via software or pushBUTTON.

6.3 Overtemperature protection

The LED driver is protected against temporary thermal overheating.
If the temperature limit is exceeded the output current of the LED module(s) is reduced. The temperature protection is activated above tc max.
The activation temperature differs depending on the LED load.
On DC operation this function is deactivated to fulfill emergency requirements.

6.4 Constant light output (CLO)

The luminous flux of a LED decreases constantly over the lifetime.
The CLO function ensures that the emitted luminous flux remains stable.
For that purpose the LED current will increase continuously over the LED lifetime. The LED driver adjusts the current afterwards automatically.

6.5 Power-up/-down fading

The power-up/-down function offers the opportunity to modify the on-/off behavior. The time for fading on or off can be adjusted in a range of 0.2 to 16 seconds. According to this value, the device dims either from 0 % up to the power-on level or from the current set dim level down to 0 %.
This feature applies while operating via 4remoteBT and when switching the mains voltage on or off. By factory default no fading time is set (=0s).

6.6 Light level in DC operation

The LED driver is designed for operation on DC voltage and pulsed DC voltage.

Light output level in DC operation: programmable 1 – 100 % (EOFu = 0.13).

The voltage-dependent input current of Driver incl. LED module is depending on the used load.

6.7 Software / programming

With appropriate software and an interface different functions can be activated and various parameters can be configured in the LED driver.
To do so, the utilityAPP is required.

7. Miscellaneous

7.1 Insulation and electric strength testing of luminaires

Electronic devices can be damaged by high voltage. This has to be considered during the routine testing of the luminaires in production.

According to IEC 60598-1 Annex Q (informative only!) or ENEC 303-Annex A, each luminaire should be submitted to an insulation test with 500 V DC for 1 second. This test voltage should be connected between the interconnected phase and neutral terminals and the earth terminal.
The insulation resistance must be at least 2 MΩ.

As an alternative, IEC 60598-1 Annex Q describes a test of the electrical strength with 1500 V AC (or 1.414 x 1500 V DC). To avoid damage to the electronic devices this test must not be conducted.

7.2 Conditions of use and storage

Humidity:	5 % up to max. 85 %, not condensed (max. 56 days/year at 85 %)
Storage temperature:	-40 °C up to max. +80 °C

The devices have to be acclimatised to the specified temperature range (ta) before they can be operated.

The LED driver is declared as inbuilt LED controlgear, meaning it is intended to be used within a luminaire enclosure.
If the product is used outside a luminaire, the installation must provide suitable protection for people and environment (e.g. in illuminated ceilings).

7.3 Placement

basicDIM Wireless has an integrated antenna for easy integration. In order to maximize the range in every direction some design guidelines should be taken into consideration when mounting the device.
The antenna is located on the corner of the enclosure. It is on the top side of the internal PCB (Printed Circuit Board).
When the device is mounted on a metal plate (e.g. frame of a luminaire), it may efficiently block the radio frequency signal. In this case, a cut-out underneath the antenna may be needed for the RF signal to exit the structure. The cut-out area should be as large as possible. Also the device should be placed as far away from any vertical metal structures as possible.

■ Antenna location

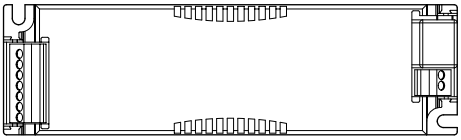

The range of the communication signal is depending on the environment e.g. luminaire, construction of the building, furnitures or humans and needs to be tested and approved in the installation.

7.4 Network compatibility

This Driver is fully compatible with networks which support up to 250 nodes (Evolution networks). If the Driver is used with different types of basicDIM Wireless devices in an Evolution network, their compatibility has to be checked before. If a device is not compatible with Evolution networks, it can be only used in networks which support up to max. of 127 devices (Classic networks).

7.5 Maximum number of switching cycles

All LED driver are tested with 50,000 switching cycles.
The actually achieved number of switching cycles is significantly higher.

7.6 Additional information

Additional technical information at www.tridonic.com → Technical Data

Lifetime declarations are informative and represent no warranty claim.
No warranty if device was opened.